Check Valves- Welded Bonnet- Full Port (Y Type)

BONNEY FORGE

800 Ltd.
1690 Ltd.

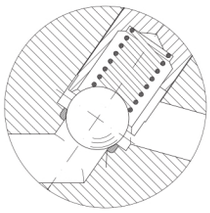

Design construction:
ASME B16.34 Limited Class - BS 5352
Testing according to API 598
Marking MSS SP25
Body bonnet weld to ASME IX
Spring on request only
Socket Weld Ends to ASME B16.11
Screwed Ends (NPT) to ASME B1.20.1
Butt Welding Ends to ASME B16.25
Ratings:

- carbon steel class 800	2000 psig @ 100°F 138 bar + 38°C
- carbon steel class 1690	4225 psig @ 100°F 291 bar + 38°C

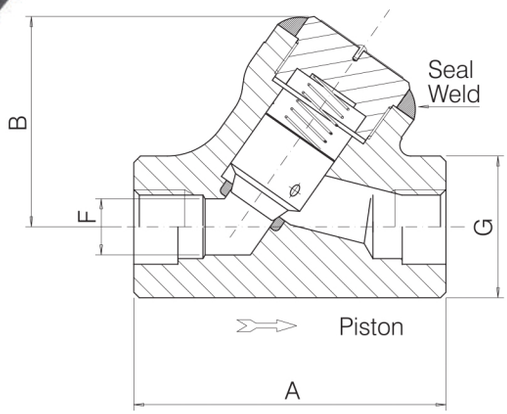

800 LTD.

FULL PORT – FIG. Y 40 - Y 50									
SIZE	inch mm	1/4 6	3/8 10	1/2 15	3/4 20	1 25	1 1/4 32	1 1/2 40	2 50
A	inch mm	3.35 85	3.35 85	3.35 85	4.13 105	4.72 120	6.5 165	6.5 165	7.48 190
B	inch mm	2.76 70	2.76 70	2.76 70	3.54 90	3.93 100	5.12 130	5.12 130	6.3 160
F	inch mm	.28 7	.35 9	.51 13	.69 17,5	.89 22,5	1.16 29,5	1.38 35	1.77 45
G	inch mm	1.50 38	1.50 38	1.50 38	1.89 48	2.20 56	3.07 78	3.07 78	3.35 85
Weight	lb. kg	2.5 1,2	2.5 1,2	2.5 1,2	5 2,3	6.5 3	17.5 8	17.5 8	26.25 12

1690 LTD.

FULL PORT – FIG. 1690Y 40 - 1690Y 50									
SIZE	inch mm	1/4 6	3/8 10	1/2 15	3/4 20	1 25	1 1/4 32	1 1/2 40	2 50
A	inch mm	3.35 85	3.35 85	4.13 105	4.72 120	6.5 165	6.5 165	7.48 190	8.66 220
B	inch mm	2.76 70	2.76 70	3.54 90	3.93 100	5.12 130	5.12 130	6.3 160	7.68 195
F	inch mm	.28 7	.35 9	.47 12	.59 15	.79 20	1.06 27	1.26 32	1.57 40
G	inch mm	1.50 38	1.50 38	1.89 48	2.20 56	3.07 78	3.07 78	3.35 85	3.74 95
Weight	lb. kg	2.5 1,2	2.5 1,2	5.25 2,4	7.75 3,6	20.5 9,3	28.5 13	29.75 13,5	39.5 18

UNITED POWER
COMMERCIAL CORPORATION
ESTD. 1961

+63-939-913-0553,
+63-917-850-4147
Fax: +63(2)8244-1234
Tel.: +63(2)8244-7061 to 68

For Inquiries:
sales10@upcc.com.ph
For Concerns:
inquiry@upcc.com.ph

7th floor, Banawe Lifestyle Center Building, 86 Banawe St., Brgy. Sto. Domingo, Quezon City, Philippines