UNITED POWER COMMERCIAL CORPORATION ESTD. 1961
+63-939-913-0553
+63-917-850-4147
Fax #: 244-1234
Tel #: 244-7061-68
For Inquiries: sales10@upcc.com.ph
For Concerns: tiugregian@upcc1.com
7th floor, Banawe Lifestyle Center Building, 86 Banawe St., Brgy., Sto. Domingo, Quezon City, Philippines

YONEKI VALVE CO.,LTD.

ANSI 150 CAST STEEL GLOBE VALVE

BOLTED BONNET O.S.&Y.

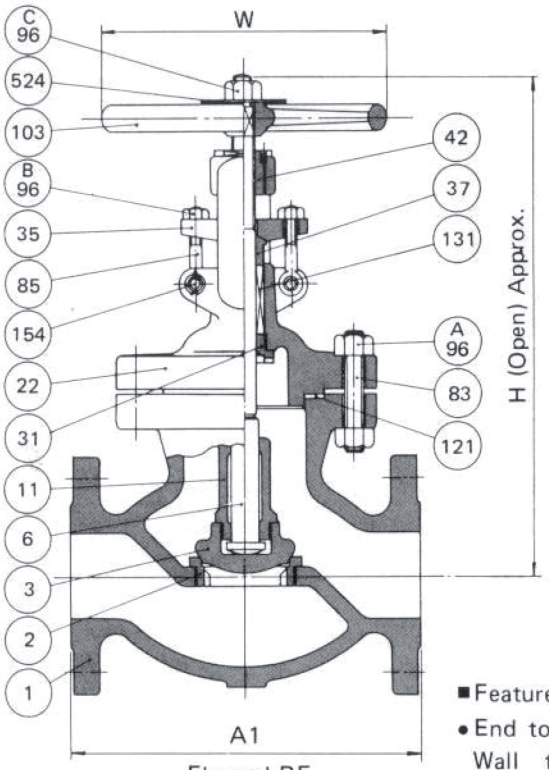

Flanged RF

A2
Butt welding end

GEAR TYPE

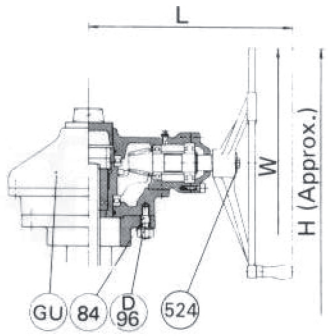

Figure No.

GL010RA	150 lb Globe RF
GL010WA	150 lb Globe Weld

■ Features

- End to end dimensions and Wall thicknesses conform to ANSI and API specifications.
- 10 in. and smaller Valves have a one piece Bonnet and Yoke design.
- 12 in. and larger Valves have a two piece Bonnet and Yoke design.
- Gear operator can be furnished upon request.
- 12 in. and larger Valves have hammer blow Handwheel.
- Angle and Stop check valves also available. Data supplied upon request.

Material Specifications Trim No. 8

NO.	PART NAME	MATERIAL
GU	Bevel Gear Unit	Cast Iron + etc.
524	Name Plate	18Cr-8Ni S. Steel
154	Eye Bolt Pin	13% Cr. S. Steel
131	Packing	*3
121	Gasket	*2
103	Handwheel	Nodular Iron
96D	Yoke Bolt Nut	ASTM A 194 Gr.2H
96C	Wheel Nut	Carbon Steel
96B	Eye Bolt Nut	ASTM A 194 Gr.2H
96A	Bonnet Bolt Nut	ASTM A 194 Gr.2H
85	Eye Bolt	ASTM A 193 Gr.B7
84	Yoke Bolt	ASTM A 193 Gr.B7
83	Bonnet Bolt	ASTM A 193 Gr.B7
42	Yoke Bush	Al-Bronze
37	Gland	ASTM A 182 Gr.F6a
35	Gland Flange	Carbon Steel
31	Bonnet Bush	ASTM A 182 Gr.F6a
22	Bonnet Yoke	ASTM A 216 Gr.WCB
11	Disc Stem Ring	ASTM A 182 Gr.F6a
6	Stem	ASTM A 182 Gr.F6a
3	Disc	ASTM A 182 Gr.F6a*1
2	Body Seat Ring	ASTM A 105 + STL
1	Body	ASTM A 216 Gr. WCB

Note
*1 12 in. & larger ASTM A216 Gr. WCB + 13% Cr. deposit
*2 Compressed asbestos or Corrugated metal.
*3 Inconel wire reinforced asbestos braided packing.

Dimensions (in./mm)

Nom. Size													
	in.	2	2-1/2	3	4	5	6	8	10	12	14	16	18
	mm	50	65	80	100	125	150	200	250	300	350	400	450
A1	in.	8	8-1/2	9-1/2	11-1/2	14	16	19-1/2	24-1/2	27-1/2	31	36	38-1/2
	mm	203	216	241	292	356	406	495	622	698	787	914	978
A2	in.	8	8-1/2	9-1/2	11-1/2	14	16	19-1/2	24-1/2	27-1/2	31	36	38-1/2
	mm	203	216	241	292	356	406	495	622	698	787	914	978
H	in.	13-3/8	15-1/4	15-3/4	17-3/4	19-3/8	21-3/8	25-5/8	28-3/4	35	51	63-3/4	78
	mm	340	387	400	476	492	543	651	730	890	1295	1619	1980
W	in.	7-7/8	7-7/8	9-7/8	11-13/16	11-13/16	14	17-11/16	19-11/16	22-1/16	24	24	24
	mm	200	200	250	300	300	355	450	500	560	610	610	610
L	in.	–	–	–	–	–	–	–	–	–	20-3/16	20-3/16	17
	mm	–	–	–	–	–	–	–	–	–	512	512	432
Weight (Approx.) RF	lb	53	77	82	139	221	267	401	650	1014	1521	2095	3969
	Kg	24	35	37	63	100	121	182	295	460	690	950	1800
Weight (Approx.) BW	lb	42	66	64	106	187	221	331	496	838	1323	1874	3638
	Kg	19	30	29	48	85	100	150	225	380	600	850	1650

FOR UPCC USE ONLY