UNITED POWER COMMERCIAL CORPORATION
ESTD. 1961
+63-939-913-0553
+63-917-850-4147
Fax #: 244-1234
Tel #: 244-7061-68
For Inquiries: sales10@upcc.com.ph
For Concerns: tiugregian@upcc1.com
7th floor, Banawe Lifestyle Center Building, 86 Banawe St., Brgy., Sto. Domingo, Quezon City, Philippines

YONEKI VALVE CO.,LTD.

ANSI 300 CAST STEEL SWING CHECK VALVE

BOLTED COVER

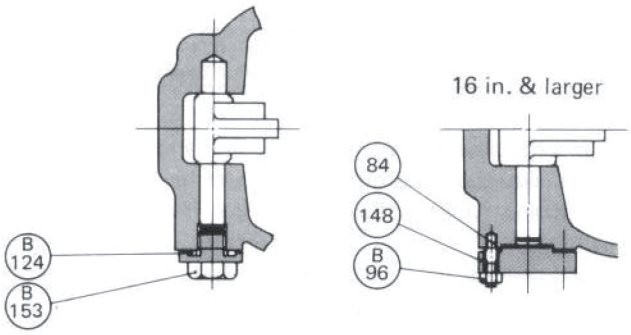

■ Features

- End to end dimensions and Wall thickness conform to ANSI and API specifications.
- Flange dimensions; 24 in. and smaller Valves conform to ANSI B16.5. 26 in. and larger Valves conform to API 605.

Figure No.	
SC030RA	300 lb Swing Check RF
SC030 J A	300 lb Swing Check RTJ
SC030WA	300 lb Swing Check Weld

- Internal Hinge pin design is available.
- Lift check valve also available. Data supplied upon request.

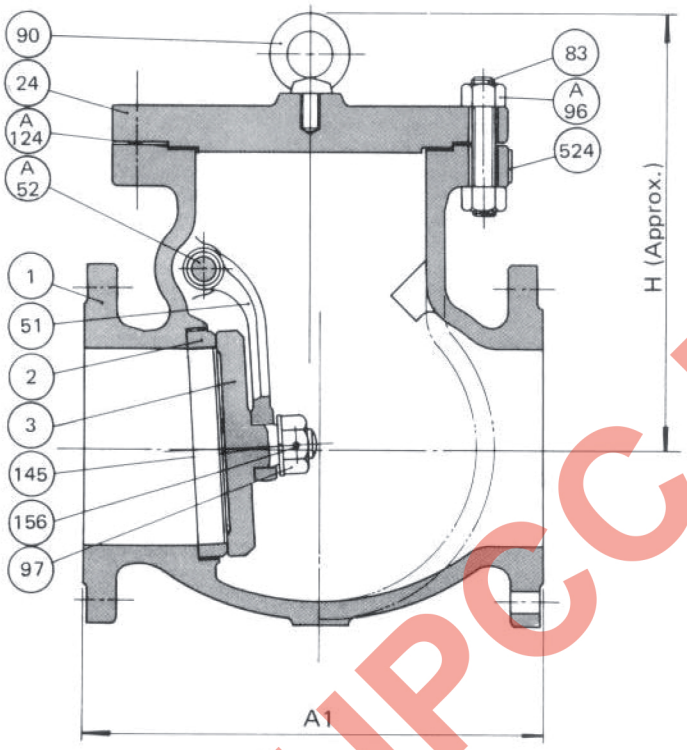

Flanged RF

Material Specifications Trim No. 8

NO	PART NAME	MATERIAL
524	Name Plate	18Cr-8Ni S. Steel
156	Knock Pin	18Cr-8Ni S. Steel
153B	Hinge Pin Plug	ASTM A105
153A	Disc Plug	ASTM A182 Gr. F6a
148	Hinge Pin Cover	ASTM A105
145	Disc Washer	18Cr-8Ni S. Steel
124B	Hinge Pin Gasket	*5
124A	Cover Gasket	*5
97	Disc Nut	18Cr-8Ni S. Steel
96B	Cover Bolt Nut	ASTM A194 Gr.2H
96A	Cover Bolt Nut	ASTM A194 Gr.2H
90	Eye Bolt	Carbon Steel *4
89	Set Bolt	18Cr-8Ni S. Steel
84	Cover Bolt	ASTM A193 Gr. B7
83	Cover Bolt	ASTM A193 Gr. B7
52B	Hinge Pin	ASTM A182 Gr. F6a
52A	Hinge Pin	ASTM A182 Gr. F6a
51	Swing Lever	ASTM A105 *3
24	Cover	ASTM A105 *2
3	Disc	ASTM A182 Gr. F6a*1
2	Body Seat Ring	ASTM A105 + STL
1	Body	ASTM A216 Gr. WCB

Note *1 14 in. & larger ASTM A216 Gr. WCB + 13% Cr. deposit
*2 12 in. & larger ASTM A216 Gr. WCB
*3 8 in. & larger ASTM A216 Gr.WCB
*4 4 in. & larger
*5 Spiral wound 304 s. steel asbestos filled

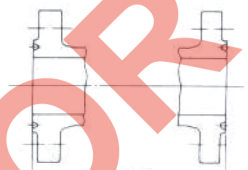

Flanged RTJ

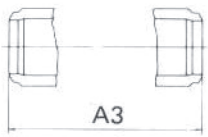

Butt welding end

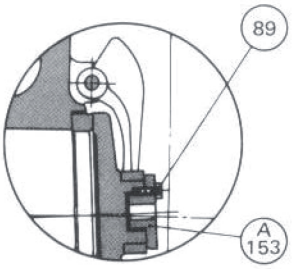

8 in. THRU 16 in.

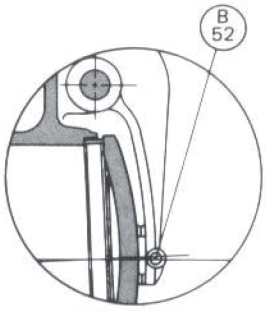

18 in. & larger

Dimensions (in./mm)

Nom Size		2	2-1/2	3	4	5	6	8	10	12	14	16	18	20	24	26	28	30	36
	in.	2	2-1/2	3	4	5	6	8	10	12	14	16	18	20	24	26	28	30	36
	mm	50	65	80	100	125	150	200	250	300	350	400	450	500	600	650	700	750	900
A1	in.	10-1/2	11-1/2	12-1/2	14	15-3/4	17-1/2	21	24-1/2	28	33	34	38-1/2	40	53	53	59	62-3/4	82
	mm	267	292	318	356	400	444	533	622	711	838	864	978	1016	1346	1346	1499	1594	2083
A2	in.	11-1/8	12-1/8	13-1/8	14-5/8	16-3/8	18-1/8	21-5/8	25-1/8	28-5/8	33-5/8	34-5/8	39-1/8	40-3/4	53-7/8	54	60	63-3/4	83
	mm	283	308	333	371	416	460	549	638	727	854	880	994	1035	1368	1372	1524	1619	2108
A3	in.	10-1/2	11-1/2	12-1/2	14	15-3/4	17-1/2	21	24-1/2	28	33	34	38-1/2	40	53	53	59	62-3/4	82
	mm	267	292	318	356	400	444	533	622	711	838	864	978	1016	1346	1346	1499	1594	2083
H	in.	7-3/4	8	8-3/4	10-7/8	11-5/8	13-1/4	16-1/4	18-1/4	22-1/8	23-1/2	25-3/8	29-7/8	33-5/8	37	41-3/8	45-1/4	50	60-5/8
	mm	197	203	222	276	295	337	413	464	562	597	645	759	854	940	1051	1149	1270	1540
Weight (Approx.) RF	lb	77	82	132	181	243	342	591	838	1091	1566	2095	2646	2977	4851	5513	6174	7497	11025
	Kg	35	37	60	82	110	155	268	380	495	710	950	1200	1350	2200	2500	2800	3400	5000
Weight (Approx.) BW	lb	71	77	110	143	154	282	507	595	1014	1224	1764	2139	2359	3925	4675	5292	6505	9482
	Kg	32	35	50	65	70	128	230	270	460	555	800	970	1070	1780	2120	2400	2950	4300

FOR UPCC USE ONLY