UNITED POWER COMMERCIAL CORPORATION
ESTD. 1961
+63-939-913-0553
+63-917-850-4147
Fax #: 244-1234
Tel #: 244-7061-68
For Inquiries: sales10@upcc.com.ph
For Concerns: tiugregian@upcc1.com
7th floor, Banawe Lifestyle Center Building, 86 Banawe St., Brgy., Sto. Domingo, Quezon City, Philippines

YONEKI VALVE CO.,LTD.

ANSI 300 CAST STEEL GLOBE VALVE

BOLTED BONNET O.S.&Y.

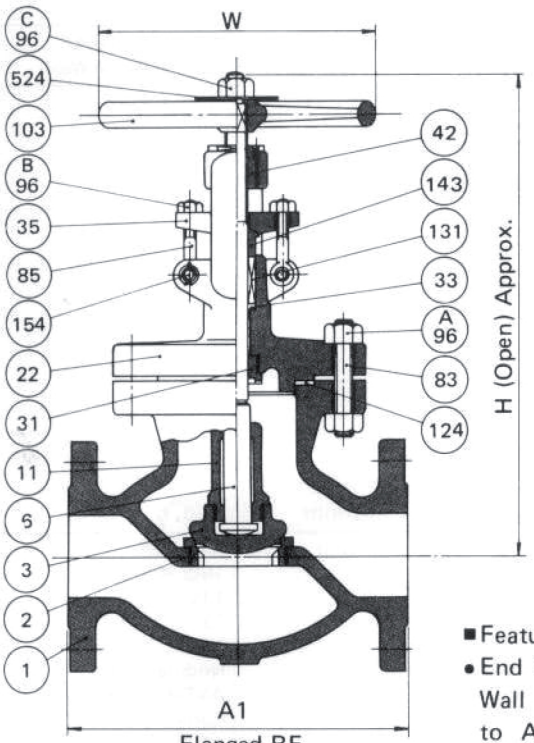

Flanged RF

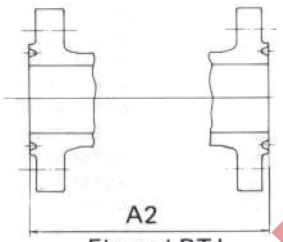

Flanged RTJ

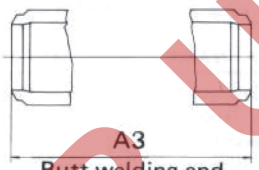

Butt welding end

GEAR TYPE

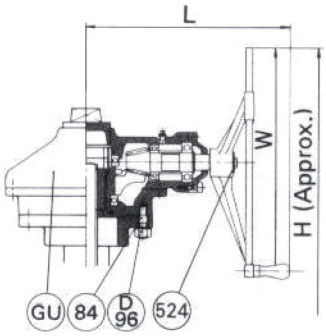

Figure No.

GL030RA	300 lb Globe RF
GL030JA	300 lb Globe RTJ
GL030WA	300 lb Globe Weld

■Features

- End to end dimensions and Wall thicknesses conform to ANSI and API specifications.
- 6 in. and smaller Valves have a one piece Bonnet and Yoke design.
- 8 in. and larger Valves have a two piece Bonnet and Yoke design.
- Gear operator can be furnished upon request.
- 8 in. and larger Valves have hammer blow Handwheel.
- Angle and Stop check valves also available. Data supplied upon request.

Material Specifications Trim No. 8

NO.	PART NAME	MATERIAL
GU	Bevel Gear Unit	Cast Iron + etc.
524	Name Plate	18Cr-8Ni S. Steel
154	Eye Bolt Pin	13% Cr. S. Steel
131	Packing	*3
124	Gasket	*2
103	Handwheel	Nodular Iron
96D	Yoke Bolt Nut	ASTM A 194 Gr.2H
96C	Wheel Nut	Carbon Steel
96B	Eye Bolt Nut	ASTM A 194 Gr.2H
96A	Bonnet Bolt Nut	ASTM A 194 Gr.2H
85	Eye Bolt	ASTM A 193 Gr.B7
84	Yoke Bolt	ASTM A 193 Gr.B7
83	Bonnet Bolt	ASTM A 193 Gr.B7
42	Yoke Bush	Al-Bronze
37	Gland	ASTM A 182 Gr.F6a
35	Gland Flange	Carbon Steel
33	Packing Washer	ASTM A 182 Gr.F6a
31	Bonnet Bush	ASTM A 182 Gr.F6a
22	Bonnet Yoke	ASTM A 216 Gr.WCB
11	Disc Stem Ring	ASTM A 182 Gr.F6a
6	Stem	ASTM A 182 Gr.F6a
3	Disc	ASTM A 182 Gr.F6a*1
2	Body Seat Ring	ASTM A 105 + STL
1	Body	ASTM A 216 Gr. WCB

Note
*1 10 in. & larger ASTM A 216 Gr. WCB + 13% Cr. deposit
*2 Spiral wound 304 s. steel asbestos filled
*3 Inconel wire reinforced asbestos braided packing

Dimensions (in./mm)

Nom Size		2	2-1/2	3	4	5	6	8	10	12	14	16
	in.	2	2-1/2	3	4	5	6	8	10	12	14	16
	mm	50	65	80	100	125	150	200	250	300	350	400
A1	in.	10-1/2	11-1/2	12-1/2	14	15-3/4	17-1/2	22	24-1/2	28	39	42
	mm	267	292	318	356	400	444	559	622	711	991	1067
A2	in.	11-1/8	12-1/8	13-1/8	14-5/8	16-3/8	18-1/8	22-5/8	25-1/8	28-5/8	39-5/8	42-5/8
	mm	283	308	333	371	416	460	575	638	727	1006	1083
A3	in.	10-1/2	11-1/2	12-1/2	14	15-3/4	17-1/2	22	24-1/2	28	39	42
	mm	267	292	318	356	400	444	559	622	711	991	1067
H	in.	14-5/8	17-1/4	17-1/4	20-5/8	26-5/8	28-1/4	37	53	57-1/8	61-1/4	67
	mm	372	438	438	524	676	717	940	1345	1450	1556	1700
W	in.	7-7/8	11-3/16	11-13/16	14	15-3/4	17-11/16	22-1/16	24	24	24	24
	mm	200	300	300	355	400	450	560	610	610	610	610
L	in.	–	–	–	–	–	–	–	20-3/16	17	17	20-3/16
	mm	–	–	–	–	–	–	–	512	432	432	512
Weight (Approx.) RF	lb	75	115	132	205	353	450	719	1257	2315	3308	4851
	Kg	34	52	60	93	160	204	326	570	1050	1500	2200
Weight (Approx.) BW	lb	60	88	97	150	287	353	595	1058	2073	2977	4410
	Kg	27	40	44	68	130	160	270	480	940	1350	2000

FOR UPCC USE ONLY