YONEKI VALVE CO.,LTD.

ANSI 300 CAST STEEL GATE VALVE

BOLTED BONNET O.S.&Y.

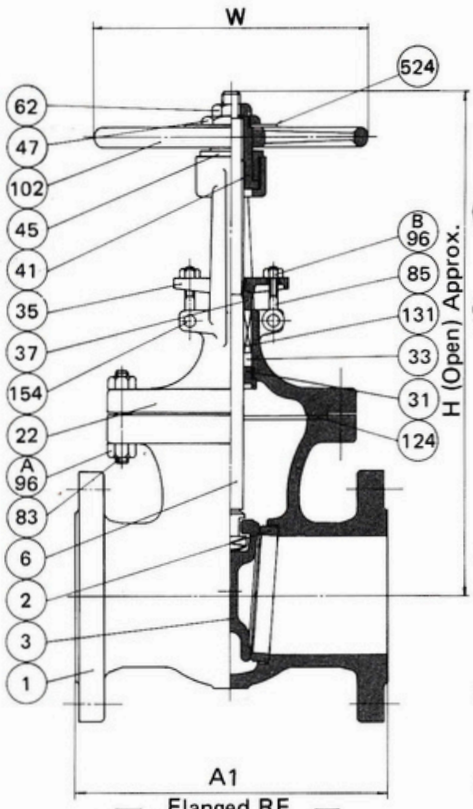

Flanged RF

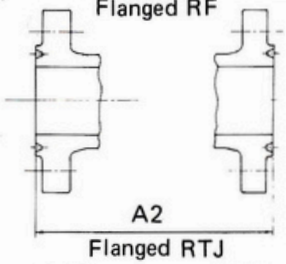

Flanged RTJ

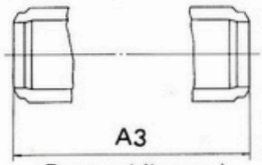

Butt welding end

GEAR TYPE

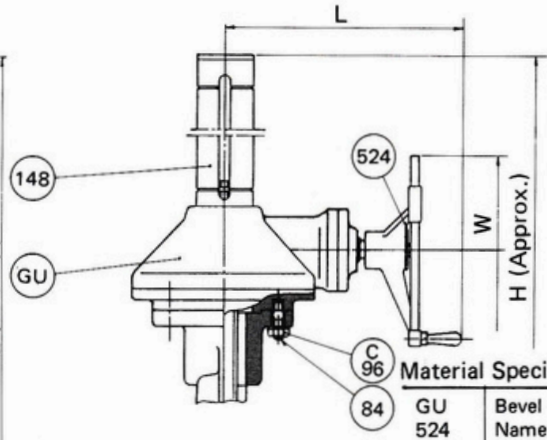

Figure No.

GA030RA	300 lb Gate RF
GA030JA	300 lb Gate RTJ
GA030WA	300 lb Gate Weld

- Features
- End to end dimensions and Wall thicknesses conform to ANSI and API specifications.
- 8 in. and smaller Valves have a one piece Bonnet and Yoke design.
- 10 in. and larger Valves have a two piece Bonnet and Yoke design.
- 4 in. and smaller Valves have a plain solid Wedge.
- 5 in. and larger Valves have a one piece flexible Wedge.
- Gear operator can be furnished upon request.
- Flange dimension;
  24 in. and smaller Valves conform to ANSI B16.5.
  26 in. and larger Valves conform to API 605.

Material Specifications Trim No. 8

NO.	PART NAME	MATERIAL
GU	Bevel Gear Unit	Cast Iron + etc.
524	Name Plate	18Cr-8Ni S. Steel
154	Eye Bolt Pin	13% Cr. S. Steel
148	Stem Cap	Carbon Steel
131	Packing	*3
124	Gasket	*2
102	Handwheel	Nodular Iron
96C	Yoke Bolt Nut	ASTM A194 Gr. 2H
96B	Eye Bolt Nut	ASTM A194 Gr. 2H
96A	Bonnet Bolt Nut	ASTM A194 Gr. 2H
85	Eye Bolt	ASTM A193 Gr. B7
84	Yoke Bolt	ASTM A193 Gr. B7
83	Bonnet Bolt	ASTM A193 Gr. B7
62	Stopper	Carbon Steel
47	Lock Nut	Carbon Steel
45	Sleeve Nut	Carbon Steel
41	Yoke Sleeve	Al-Bronze
37	Gland	ASTM A182 Gr. F6a
35	Gland Flange	Carbon Steel
33	Packing Washer	ASTM A182 Gr. F6a
31	Bonnet Bush	ASTM A182 Gr. F6a
22	Bonnet Yoke	ASTM A216 Gr. WCB
6	Stem	ASTM A182 Gr. F6a
3	Wedge	ASTM A182 Gr. F6a *1
2	Body Seat Ring	ASTM A105 + STL
1	Body	ASTM A216 Gr. WCB

Note *1 6 in. & 8 in. ASTM A217 Gr. CA15
10 in & larger ASTM A216 Gr. WCB + 13% Cr. deposit
*2 Spiral wound 304 s. steel asbestos filled
*3 Inconel wire reinforced asbestos braided packing

Dimensions (in./mm)

Nom. Size		2	2-1/2	3	4	5	6	8	10	12	14	16	18	20	24	26	28	30	36	40	42	48
	in.	2	2-1/2	3	4	5	6	8	10	12	14	16	18	20	24	26	28	30	36	40	42	48
	mm	50	65	80	100	125	150	200	250	300	350	400	450	500	600	650	700	750	900	1000	1050	1200
A1	in.	8-1/2	9-1/2	11-1/8	12	15	15-7/8	16-1/2	18	19-3/4	30	33	36	39	45	49	53	55	68	76	78	88
	mm	216	241	283	305	381	403	419	457	502	762	838	914	991	1143	1245	1346	1397	1727	1930	1981	2235
A2	in.	9-1/8	10-1/8	11-3/4	12-5/8	15-5/8	16-1/2	17-1/8	18-5/8	20-3/8	30-5/8	33-5/8	36-5/8	39-3/4	45-7/8	50	54	56	69-1/8	–	–	–
	mm	232	257	298	321	397	419	435	473	518	778	854	930	1010	1165	1270	1372	1422	1756	–	–	–
A3	in.	8-1/2	9-1/2	11-1/8	12	15	15-7/8	16-1/2	18	19-3/4	30	33	36	39	45	49	53	55	68	76	78	88
	mm	216	241	283	305	381	403	419	457	502	762	838	914	991	1143	1245	1346	1397	1728	1930	1981	2235
H	in.	16-1/4	18-3/4	19-7/8	23-3/4	30-3/4	31-7/8	40-3/8	49-1/4	57	66-7/8	80-1/8	89-5/8	96-3/4	112-7/8	126	130	148-1/2	169-3/4	188-5/8	198-1/8	217-3/8
	mm	413	476	505	604	781	810	1026	1251	1448	1698	2035	2277	2458	2867	3200	3302	3772	4312	4791	5032	5522
W	in.	7-7/8	7-7/8	9-7/8	9-7/8	11-13/16	14	15-3/4	19-11/16	22-1/16	18-1/8	24	24	24	24	24	30	30	30	24	24	24
	mm	200	200	250	250	300	355	400	500	560	460	610	610	610	610	610	760	760	760	610	610	610
L	in.	–	–	–	–	–	–	–	–	–	16-13/16	17	17	17	20-3/16	20-3/16	21-13/16	21-13/16	21-13/16	20-3/16	20-3/16	20-3/16
	mm	–	–	–	–	–	–	–	–	–	427	432	432	432	512	512	554	554	554	512	512	512
Weight (Approx.) RF	lb	62	88	104	154	265	287	430	772	1069	1588	2536	3164	4289	5843	6946	8070	9592	15104	18654	20948	27342
	Kg	28	40	47	70	120	130	195	350	485	720	1150	1435	1945	2650	3150	3660	4350	6850	8460	9500	12400
Weight (Approx.) BW	lb	51	77	70	132	221	234	324	562	838	1477	2205	2602	3638	4851	5711	6637	7629	11003	13583	14994	19845
	Kg	23	35	36	60	100	106	147	255	380	670	1000	1180	1650	2200	2590	3010	3460	4990	6160	6800	9000